(No Model.) 4 Sheets—Sheet 1.

W. ELLIS.

MACHINE FOR RENDERING LATHS AND CUTTING VENEERS.

No. 390,289. Patented Oct. 2, 1888.

FIG: 1..

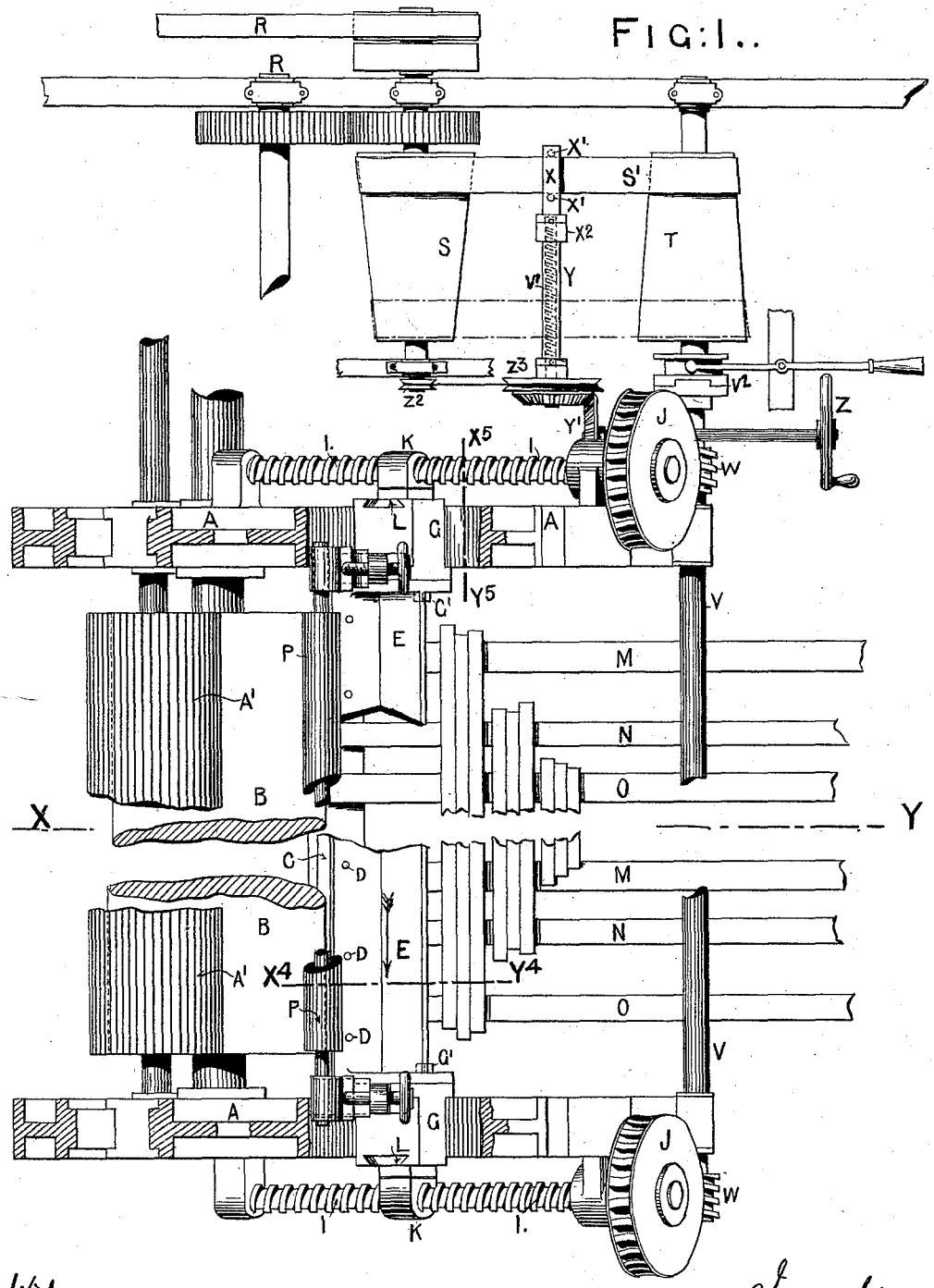

Witnesses
J. E. Halford
C. P. Hammond

Inventor
William Ellis
By F. Prince
Attorney

N. PETERS, Photo-Lithographer, Washington, D. C.

(No Model.) 4 Sheets—Sheet 2.

W. ELLIS.

MACHINE FOR RENDERING LATHS AND CUTTING VENEERS.

No. 390,289. Patented Oct. 2, 1888.

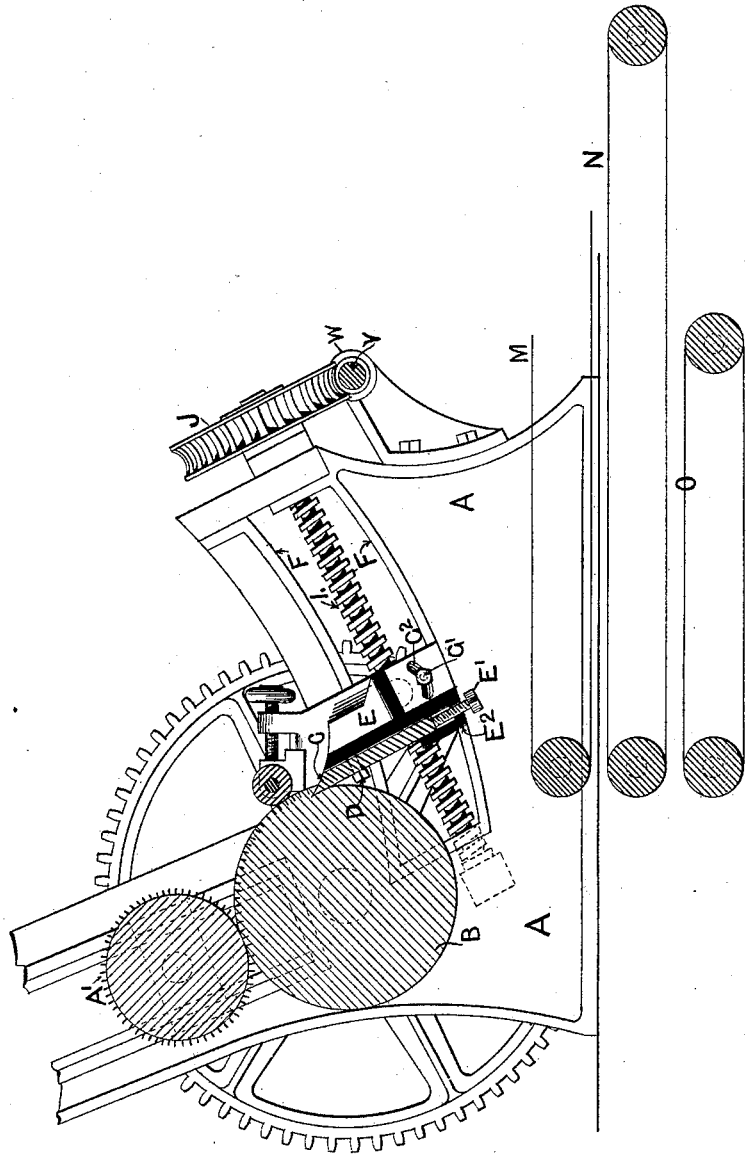

FIG. 2.

Witnesses
T. E. Halford
C. P. Hammond

Inventor
William Ellis
By T. Prince
Attorney

N. PETERS, Photo-Lithographer, Washington, D. C.

(No Model.) 4 Sheets—Sheet 3.

W. ELLIS.

MACHINE FOR RENDERING LATHS AND CUTTING VENEERS.

No. 390,289. Patented Oct. 2, 1888.

FIG. 4.

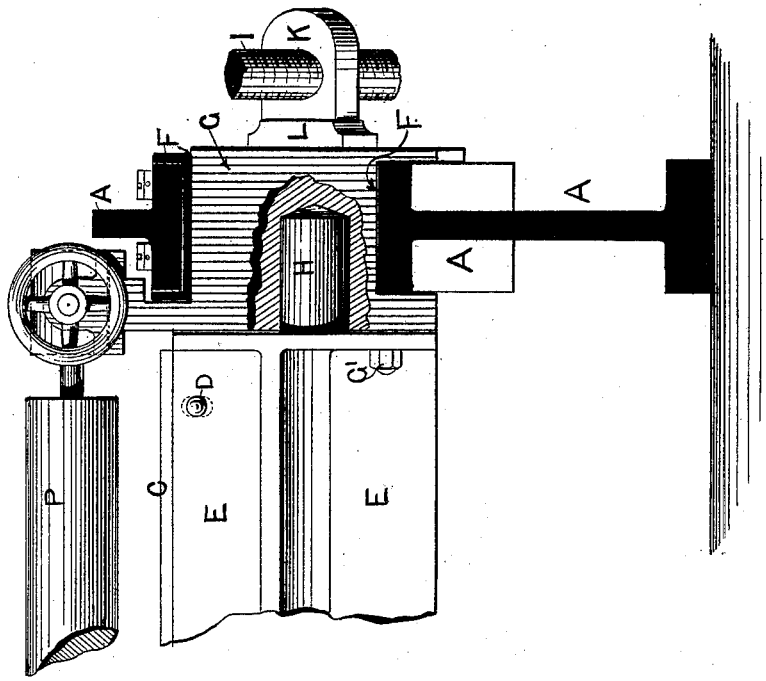

FIG. 3.

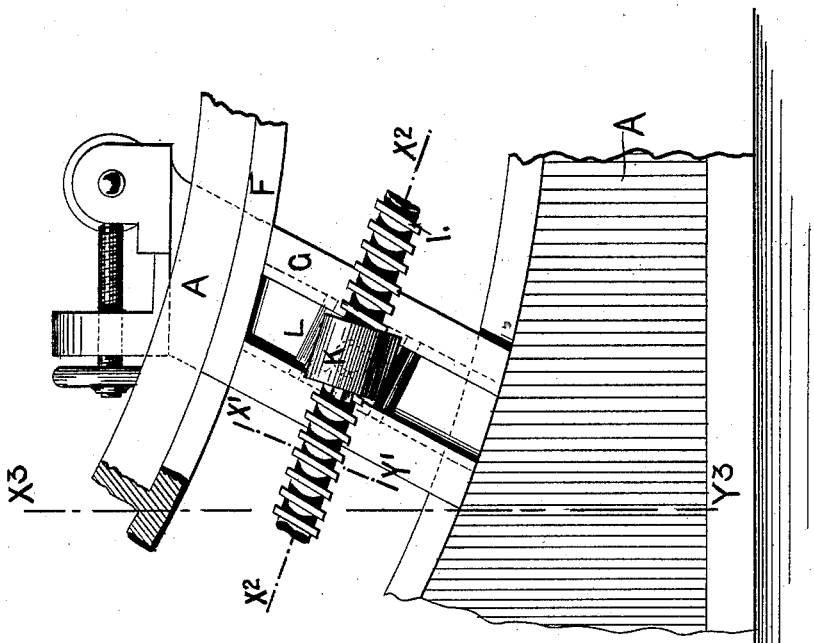

Witnesses
T. E. Halford
C. P. Hammond

Inventor
William Ellis
By. F. Prince
Attorney

N. PETERS, Photo-Lithographer, Washington, D. C.

(No Model.) 4 Sheets—Sheet 4.

W. ELLIS.

MACHINE FOR RENDERING LATHS AND CUTTING VENEERS.

No. 390,289. Patented Oct. 2, 1888.

FIG: 7.

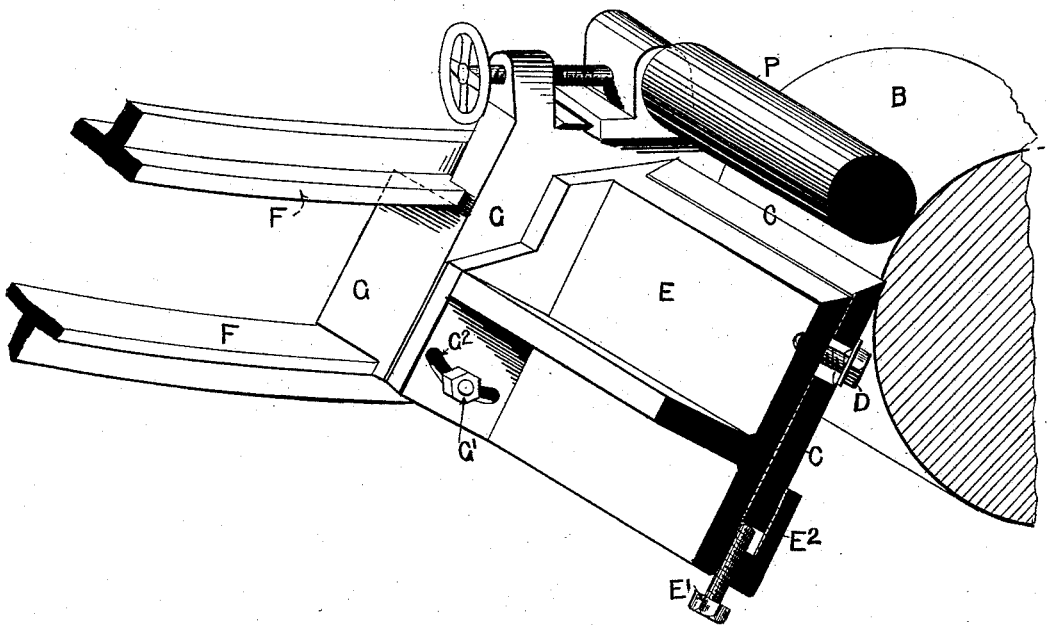

FIG: 5.

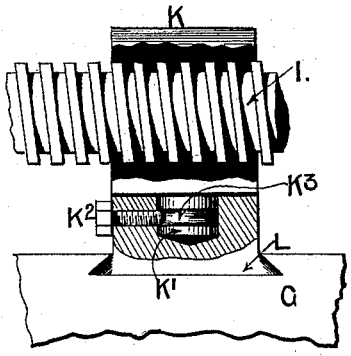

FIG: 6.

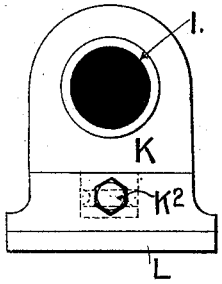

Witnesses
T. E. Halford
C. P. Hammond

Inventor
William Ellis
By F. Prince
Attorney

N. PETERS, Photo-Lithographer, Washington, D. C.

UNITED STATES PATENT OFFICE.

WILLIAM ELLIS, OF PECKHAM, COUNTY OF SURREY, ASSIGNOR TO THE PATENT LATH, SPLINT, AND MATCH SYNDICATE, (LIMITED,) OF LONDON, ENGLAND.

MACHINE FOR RENDERING LATHS AND CUTTING VENEERS.

SPECIFICATION forming part of Letters Patent No. 390,289, dated October 2, 1888.

Application filed November 29, 1886. Serial No. 220,130. (No model.) Patented in Sweden February 16, 1885, No. 67; in England October 22, 1886, No. 13,492; in Belgium November 22, 1886, No. 75,324, and in France November 24, 1886, No. 179,868.

To all whom it may concern:

Be it known that I, WILLIAM ELLIS, a subject of the Queen of Great Britain, residing at Peckham, county of Surrey, England, have invented new and useful Improvements in Machines for Rendering Laths and Cutting Veneers, (for which I have obtained Letters Patent in Sweden, No. 67, bearing date February 16, 1885; in Great Britain, No. 13,492, bearing date October 22, 1886; in Belgium, No. 75,324, bearing date November 22, 1886; and in France, No. 179,868, bearing date November 24, 1886,) of which the following is a specification.

My invention relates to that form of machine in which the log is held between centers, as in a lathe, and revolved against a long knife, which cuts off a shaving the whole length of the log. When used for rendering laths, a rotary divider above the log is pressed upon it, making longitudinal incisions in it the width and thickness of a lath, so that the shaving when cut off is in laths. I attain these results by the mechanism illustrated in the accompanying drawings, in which—

Figure 1 is a general plan view of the machine. Fig. 2 is a vertical cross-section taken on the line X Y, Fig. 1. Fig. 3 is an enlarged partial front elevation at either end of machine. Fig. 4 is a partial front sectional elevation taken either on line X^3 Y^3 of Fig. 3 or on the line X^5 Y^5, Fig. 1. Fig. 5 is an enlarged detail view in plan section on the line X^2 Y^2 of Fig. 3; Fig. 6, a front view of Fig. 5 taken on the line X′ Y′, Fig. 3. Fig. 7 is a sectional perspective view taken on the line X^4 Y^4, Fig. 1, in the direction of the arrow.

A is the frame; A′, the rotary divider for longitudinally incising a log; B, the log; C, the long knife secured by screws D to the planed back of a knife-holder, E, which, as well as the knife, extends the whole length of the log and serves to support the knife and keep it rigid while cutting. The knife C is adjustable upon the knife-holder E, and may be raised up by screws E′, placed at intervals along the bottom of the knife-holder E. The screws D, being inserted from the log side of knife, hold it rigidly against the back of E, which keeps it much steadier than in the old plan, where there was no back and where the knife was forced forward toward the log.

In addition to the screws D the knife C is supported by claws E^2, placed at intervals along the bottom of the knife-holder E. These claws facilitate the adjustment of the knife C by the screws E′.

A disadvantage in the old form of machine was that if the cutting-edge of the knife were set right at starting when the log was large, the position of edge was all wrong when the log had been reduced to a comparatively small diameter, on account of the knife having moved in a straight line toward the log. The salient feature of this invention is intended to remove this disadvantage by causing the knife to move in a curve, which is carried out as follows:

A curved guide, F, is formed in the frame A at each end of machine. In this guide works a sliding block, G, to which the knife-holder E is firmly secured, so that the edge of the knife is obliged to take the radial motion imparted to the block G by the guide F, which automatically changes the position of knife while cutting, so that if the cutting-edge is set right for cutting when the log is largest it will still be right when the log is reduced as small as possible.

The knife-holder E is free to turn on the pin H, at each end, which fits into the slide-blocks G. This allows the knife to be properly adjusted in the first instance, and when this is done the knife-holder is tightened up against the blocks G by the set-screws G′ passing through the curved slots G^2. The movement of the slide-blocks G is effected by means of straight screws I, revolved by worm-wheels J, suitably turned. The screws I work through and engage nuts K, held by a pivot, K′ in carriers L, free to move up or down slides formed in blocks G. The pivot K′ is retained in carriers L by means of set-screw K^2 and groove K^3. Compensation is thus provided for the different motions due to the straight screw I and curved guide F.

M N O represent traveling bands placed one above another, upon which the laths fall, after

being cut off, to sort the different lengths and carry them away from machine. A roller, P, is carried by the knife-holder E, which bears against the log while being cut. This further assists in steadying the knife while cutting.

The knife-holder is moved in the following manner: A belt, R, drives the conical pulley S, which imparts motion to a second conical pulley, T, by a band, S′. The pulley T is connected to a shaft, V, with worms W, which impart motion to the wheels J, connected to screws I.

V′ is a guide rod, upon which travels a nut, X^2, having an arm, X, carrying belt-prongs X′. This nut X^2 is moved along guide V′ by under screw Y; Y′, bevel-gearing connected to screw Y. This gearing is turned by outside hand-wheel, Z, to set the belt where required on pulleys S T. If it is desired to give a gradual continuous movement to the belt, the screw Y may be turned by pulleys Z^2 Z^3, connected by gut.

What I claim, and desire to secure by Letters Patent of the United States, is—

1. In machines for rendering laths, the combination, with a divider, A′, and knife C, of the knife-holder E, curved guides F, blocks G, screws I, suitably turned, pivoted nut K, and sliding carrier L, as and for the purposes stated.

2. In machines for cutting veneers, the combination, with the knife C, of the knife-holder E, curved guides F, sliding blocks G, screws I, suitably turned, pivoted nut K, and sliding carrier L, as and for the purposes stated.

3. In machines for rendering laths and cutting veneers, the combination of the curved guides F, sliding blocks G, screws I, suitably turned, pivoted nut K, and sliding carrier L, as and for the purposes stated.

WILLIAM ELLIS.

Witnesses:

G. F. WARREN,
Notary Public, 17 *Gracechurch Street, London, E. C.*

WALTER J. SKERTEN,
17 *Gracechurch Street, London, E. C.*